Hardware design notes

Design goals

The goal of the controller hardware design is to develop an efficient, reliable, and compact system that delivers stable performance under all operating conditions. The design focuses on minimizing power consumption, ensuring high signal integrity, and achieving robust protection against electrical noise and faults. Additionally, the controller is intended to be cost-effective by using optimized component selection and simplified manufacturing processes, while maintaining scalability for future upgrades. Overall, the objective is to produce a small, low-cost, and high-performance controller suitable for real-world applications where accuracy, durability, and ease of integration are essential.

Schematic notes

Black pill pinout (STM32F4xx)

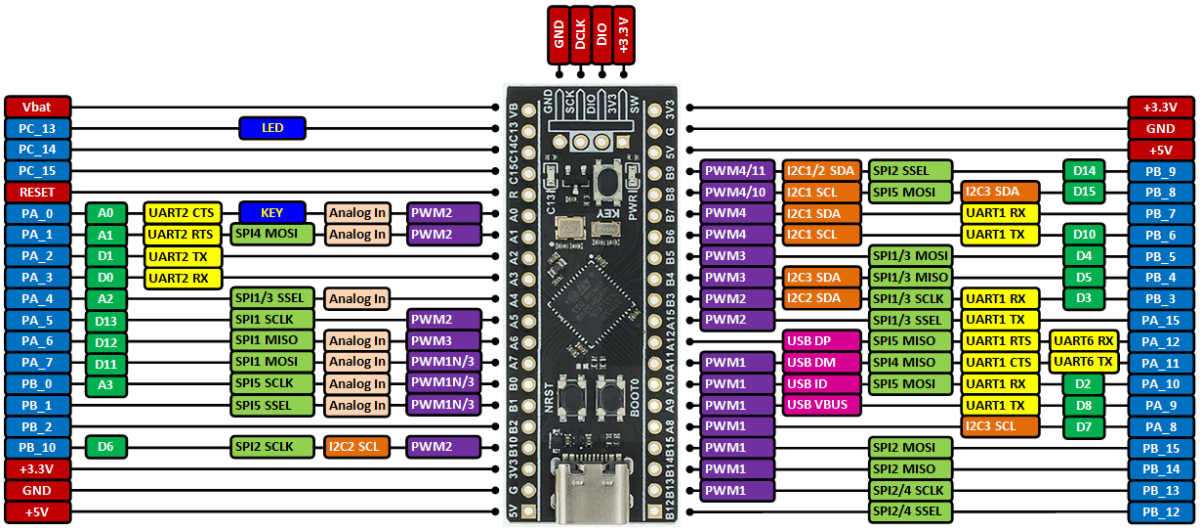

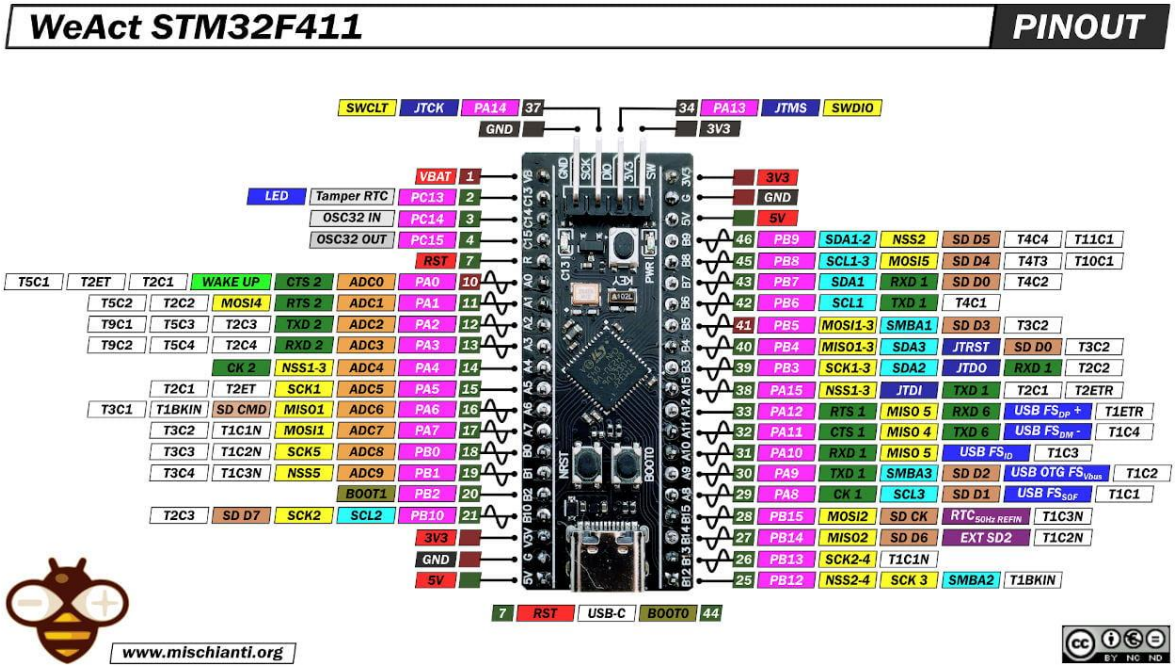

Pins table

PIN	Function	Type
PA0	Reads NTC	Analog Input
PA1	Analog signal for speed control	Analog Input
PA2	Current senser for phase V	Analog Input
PA3	Current senser for phase W	Analog Input
PA4	Chip select for the encoder SPI	Digital Output
PA5	Clock signal for the encoder SPI	Digital Output
PA6	Encoder data output	Digital Input
PA7	MOSI	Digital Output
PB0	PWM input for rotor position	Digital Input
PB6	UART RX	Digital Input
PB7	UART TX	Digital Output

PB10	Phase U Zero crossing	Digital Input
PB2	Phase V Zero crossing	Digital Input
PB1	Phase W Zero crossing	Digital Input
PA8	Phase U high side PWM	PWM
PA9	Phase V high side PWM	PWM
PA10	Phase W high side PWM	PWM
PB13	Phase U low side PWM	PWM
PB14	Phase V low side PWM	PWM
PB15	Phase W low side PWM	PWM

Notes

- No need for RPP cuz can be done in the connector
- The capacitors bank is made to deliver instant current for the motor
- The TVS diodes is placed near the connector to clip any voltage spikes
- The fuse should be placed before the converter to protect it in case of any faults
- BAT54 Schottky used for over voltage and under voltage protection for analog input signal
- Not all STM32 pins capable of reading 5v
- Most of the 100nf capacitors are used to filter noise
- ferrite bead is used to filter out high frequency noise
- Outputs of the zero crossing circuit are pull-down

Components Notes

- Choose a connectors that can handle the required power with the right pitch
- Take care of the components ratings and safety margins

PCB Notes

- The Encoder uses SPI with sub MHz frequency and should be very close the MCU pins

Assembly Notes

- consider the stm direction
- consider any component direction
- don't touch the mosfets with pair hands
- test the converter voltage before assembly
- take care that mounting holes are grounded
- ntc wire is long and will be mounted behind the mosfets heatsink
- you may have to short the virtual ground capacitor

For The Future

- Consider gan mosfets